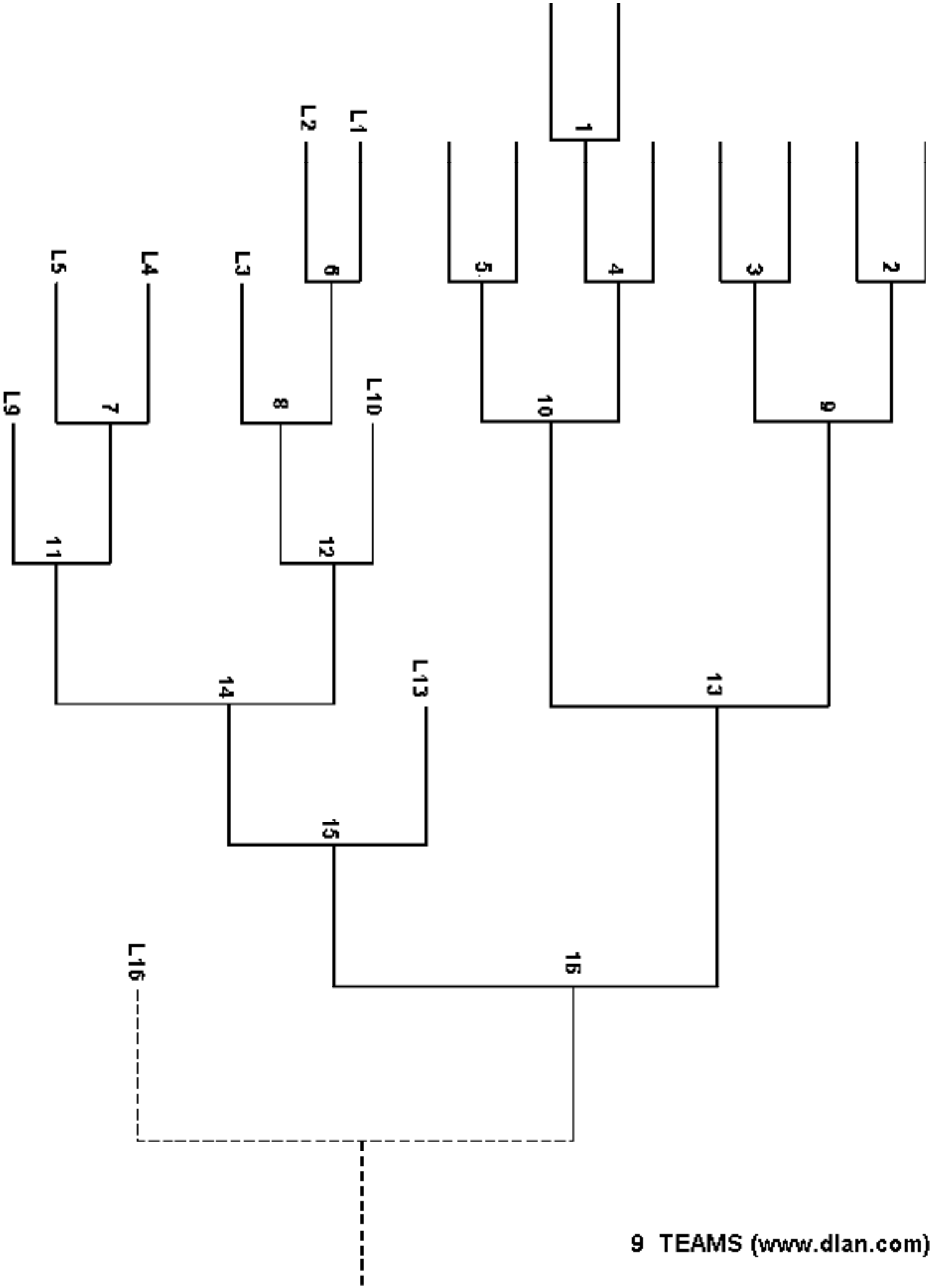

9 TEAMS (www.dlan.com)