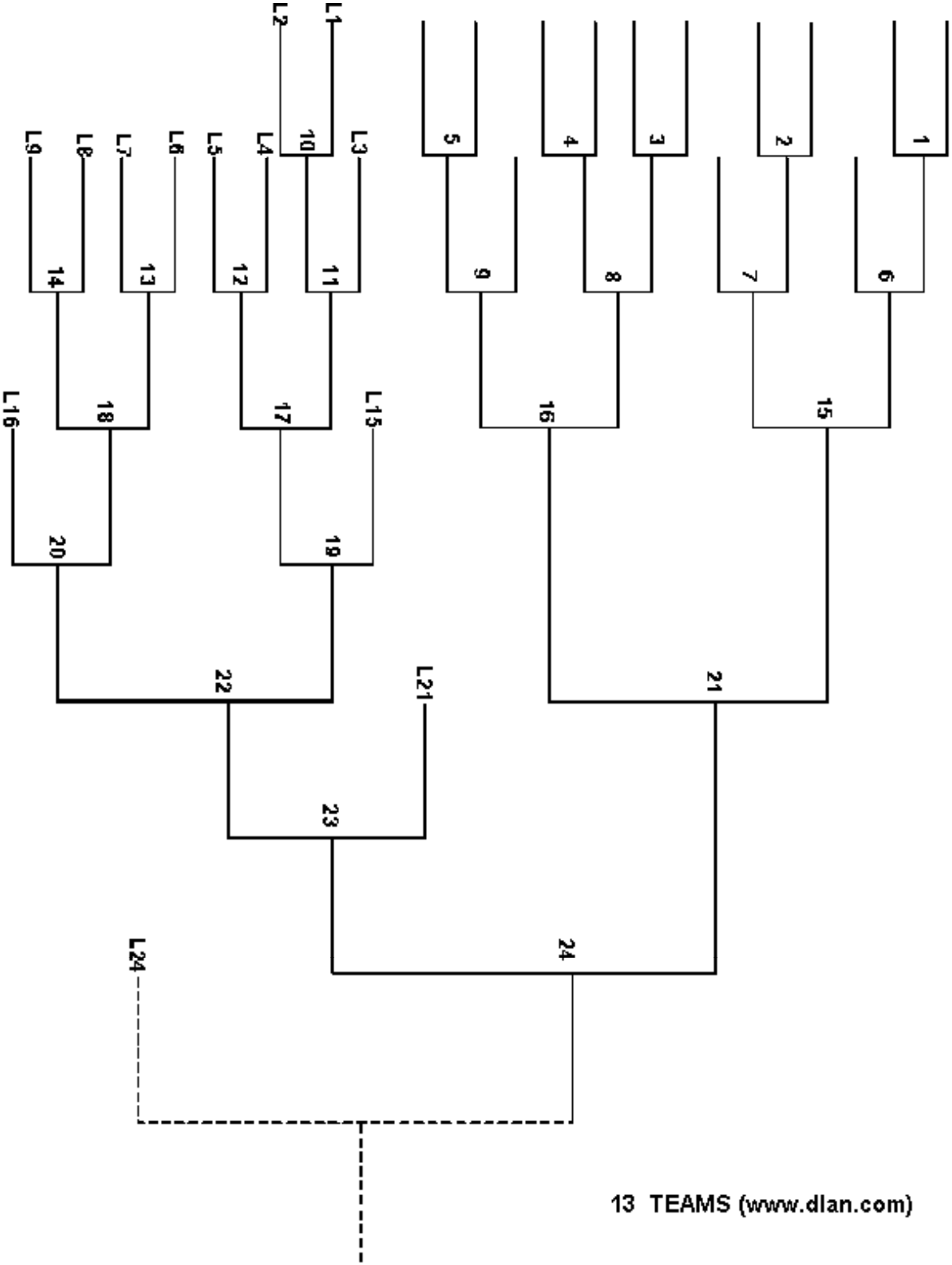

13 TEAMS (www.dlan.com)