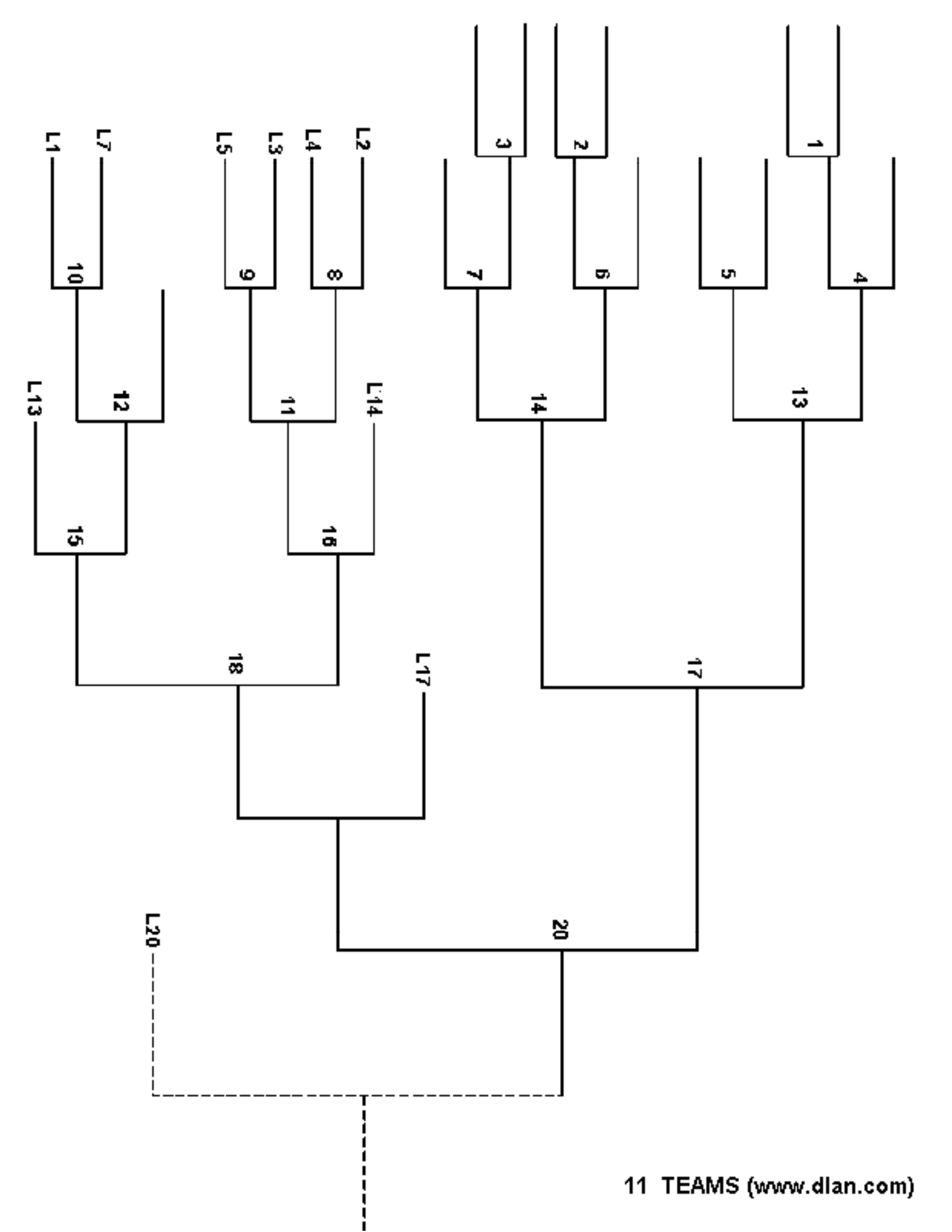

11 TEAMS (www.dlan.com)